IM700 Starter

Engine Size:
Diesel: up to 14 liter

System Voltage:
24V

Rotation:
Clockwise

Standard Mountings:
SAE #3

Standard Pinion:
11 tooth / modul 3
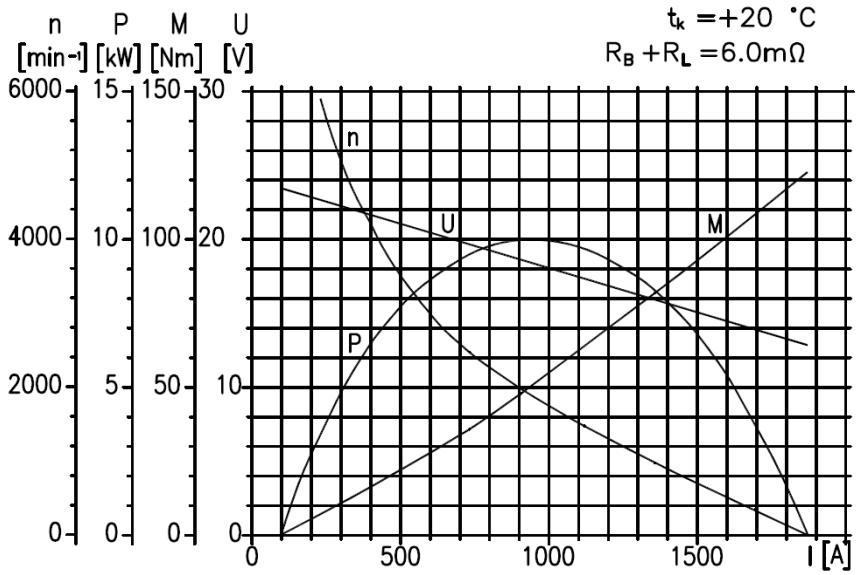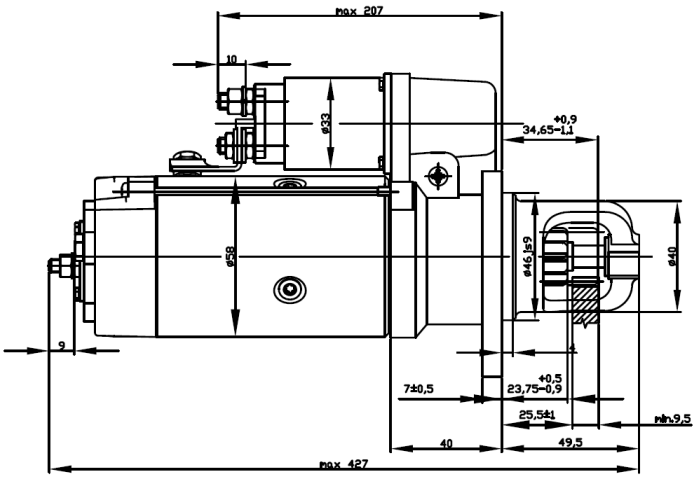
Weight:
19.5 kg